CSF inox

csfinoxGroup

FLOW TECHNOLOGY COMPONENTS

HYGIENE BIOTECHNOLOGY INDUSTRIAL

Twin Screw Pumps

TS series

Type of pump

- Twin screw pump entirely made of stainless steel.
- Contact surfaces designed according to the latest design requirements regarding hygiene.
- Single or double flushed, balanced hygienic mechanical seals.
- Suitable for CIP cleaning and SIP sterilisation.

Advantages

- Suitable for non-viscous liquids and highly viscous fluids.
- Ideal pumping operation for delicate products, with suspending solids.
- Superb suction performance and suitable for high differential pressures.
- Reduced level of pulsations without generating foam, also with a high gas content.
- Compact size in relation to the supplied performance and high volumetric efficiency.
- No contamination of the pumped products and no shedding of material from wear parts.

Pumping applications

- Liquid food and beverages, dairy fluids, confectionery products, pharmaceutical and biotechnological fluids, cosmetics and fine chemicals.
- Fluids with suspended solids such as fruit and vegetables that must not be damaged.
- Fluids with suspended gas.

Typical products

- Food sector: fruit and vegetable juices - purees and concentrates – beverages, also with suspended particles - syrups - spirits - chopped tomatoes - chopped vegetables - fruit salads - thick soups and gastronomic preparations - chocolate and custards - ice creams.
- Dairy sector: milk - cream - soft cheeses - yogurt - curds - ricotta.
- Cosmetic and pharmaceutical sector: general pharmaceutical fluids - cosmetics - creams - gel and shampoos - detergents.

FEATURES

- All parts in product contact are made of AISI 316L with a surface finish less than 0.8 micron, designed according to the latest EHEDG hygiene requirements and approved to the US 3A sanitary standards.
- Support entirely made of AISI 304 stainless steel.
- Shaft synchronisation by means of optimised spiral profile toothed wheels.
- High resistance stainless steel shafts supported by oil bath bearings.
- Single or double flushed, balanced hygienic mechanical seals.
- Standard connections series DIN 11851/11864 and Clamp, SMS, RJT, flanges and special accessories on request.
- EPDM, FPM and HNBR gaskets compliant with EU Reg. 1935/2004 and FDA; other materials on request.
- Motor shaft with key for coupling with flexible coupling to the motor drive.
- Wide range of optional accessories available to meet all market requirements, such as surface hardening treatments, stainless steel base or carriage installation, version with hollow space, by-pass, flow or pressure sensors.

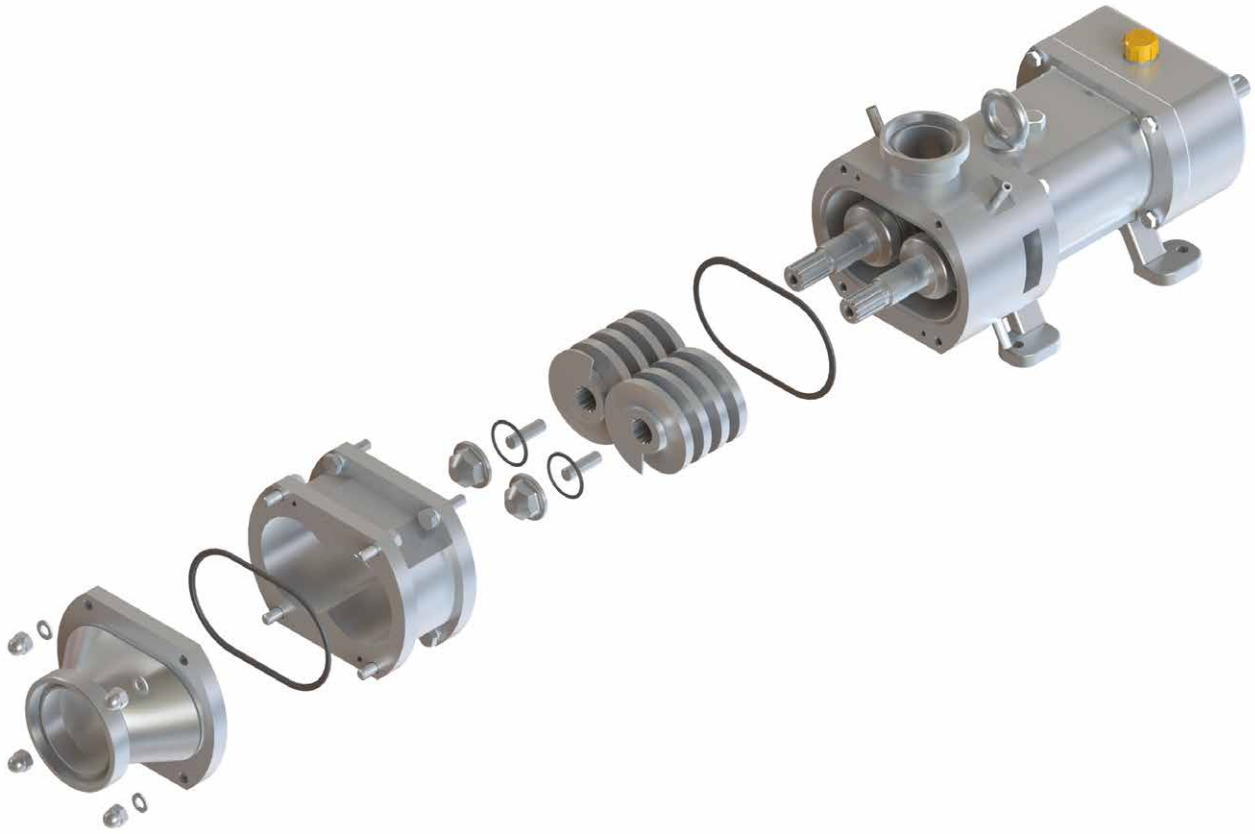

Available with different screw profiles to provide the best performance according to the type of installation.

- For high capacity
- For high pressure
- For delicate fluids with suspended solids

PERFORMANCE

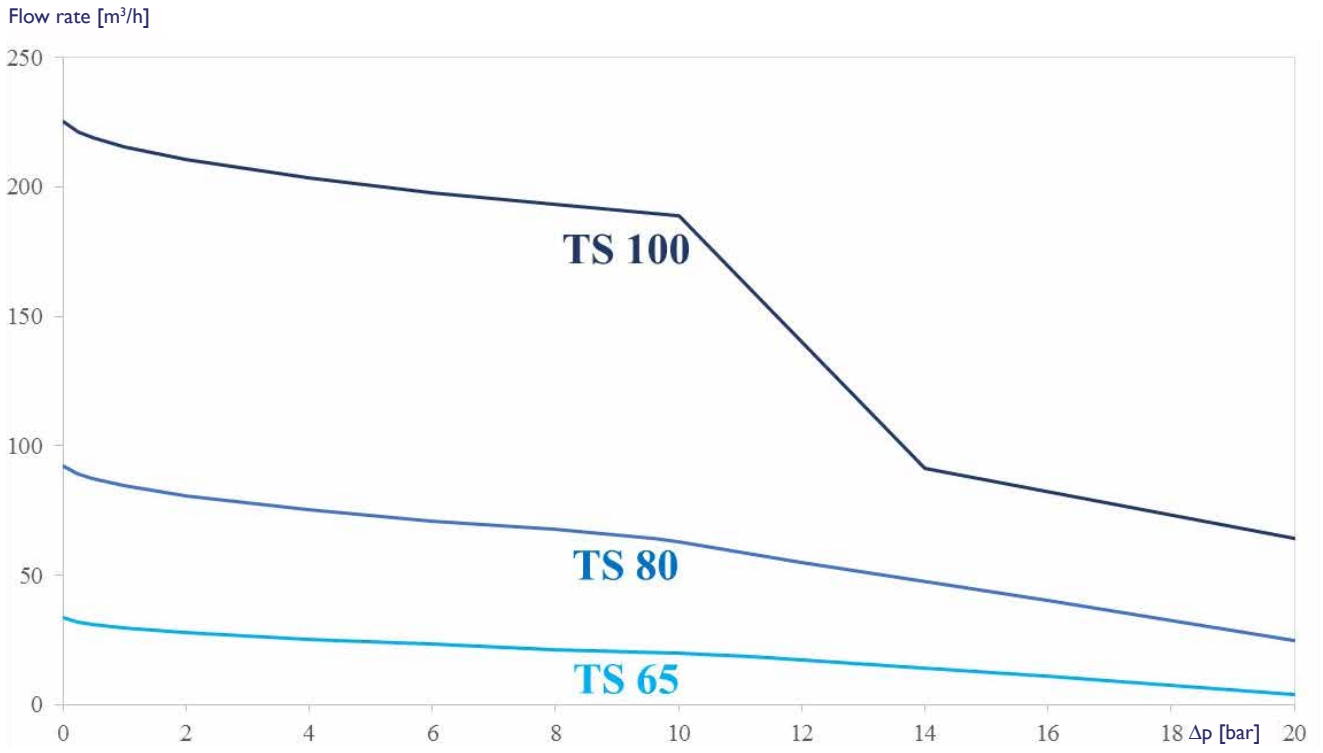

Operating features with clean water at 20°C

Performance

- Capacity from 0 to 200 m³/h
- Differential pressure up to 20 bar
- Process temperature up to 140°C High temperatures are available on request
- Product viscosity up to 1.000.000 cP

MECHANICAL SEALS

The TS range twin screw pumps can be supplied with different shaft seals according to the application:

A - Single mechanical seal

The single mechanical seal is a balanced hygienic cartridge type and is standard for low rotation speed applications and/or with non-viscous products.

MATERIALS:

- Silicon carbide / Silicon carbide
- Moulded gaskets in: EPDM, HNBR, FPM and, on request, FFKM

This execution can also be set up with an external cooling quench, using an optional radial seal ring.

B - Double flushed mechanical seal

The double mechanical seal is a balanced hygienic cartridge type. The ideal solution for all low speed applications with viscous process fluids and high rotational speed CIP processes.

MATERIALS:

- Silicon carbide / Silicon carbide
- Moulded gaskets in: EPDM, HNBR, FPM and, on request, FFKM

OVERALL DIMENSIONS

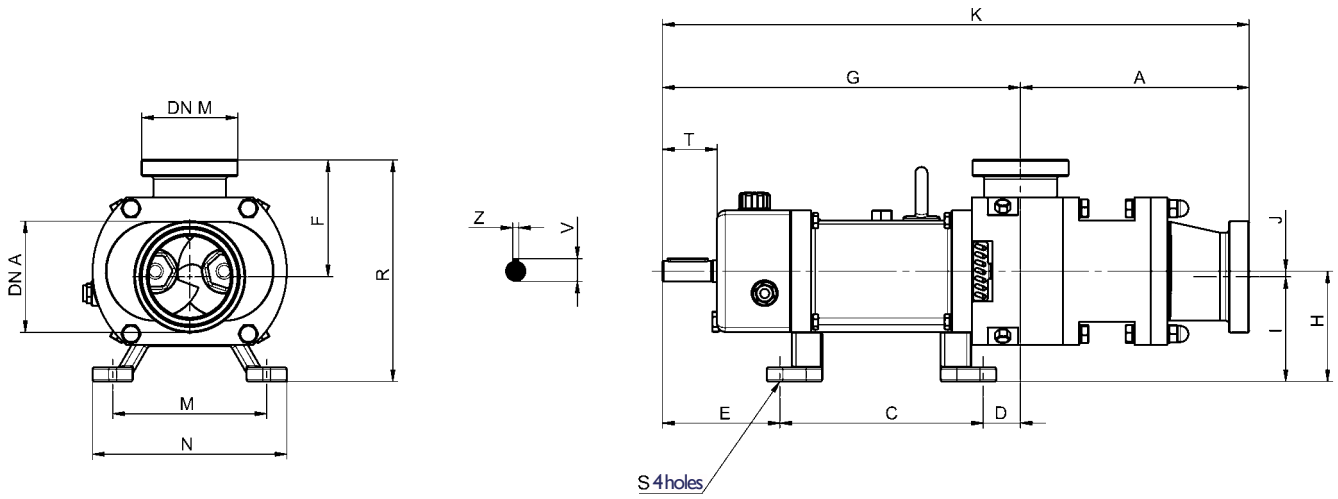

Dimensions not binding - DN = DIN 11851 male threaded connections with standard IEC/EN motors

Pumps	DNa	DNm	A	C	D	E	F	G	H	I	J	K	M	N	R	S	T	U	V	Z
TS 65	80	65	226	201	37	116	115.5	354	109	103.5	5.5	580	152	192	219	11	54	20	22.5	6
TS 80	100	80	280	283	18	134	147	435	178	164	14	715	300	340	311	14	72	32	33.5	10
TS 100	125	100	375	308	43	221	199.5	572	192	164	27.5	947	300	340	364	14	129	45	26	14

C.S.F. Inox S.p.A. Strada per Bibbiano, 7 - 42027 Montecchio E. (RE) - ITALY EU
Ph +39.0522.869911 r.a. - Fx +39.0522.865454 - italia@csf.it - www.csf.it

Export Department • Commercial Étranger • Comercial Extranjero
Ph +39.0522.869922 - Fx +39.0522.869841 - export@csf.it - www.csf.it

All the instructions, data and representations (in whatever way executed) listed in this publication are indicative and do not binding. C.S.F. does not stand surety or undertake any obligation for the utilisation of this document and for the information contained. In particular, it does not guarantee against omissions or errors of the data and drawings here indicated.
Notice that the technical specifications, information and representations in this document are merely indicative and approximate.
C.S.F. INOX reserves the right at any moment and without notice to modify the data, drawings and information indicated in this document.